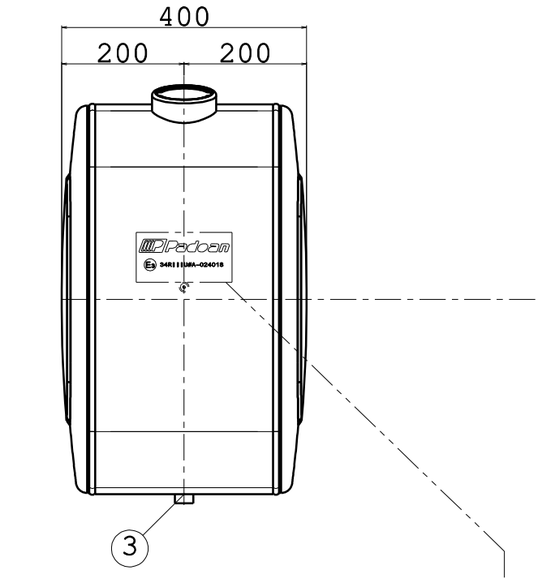

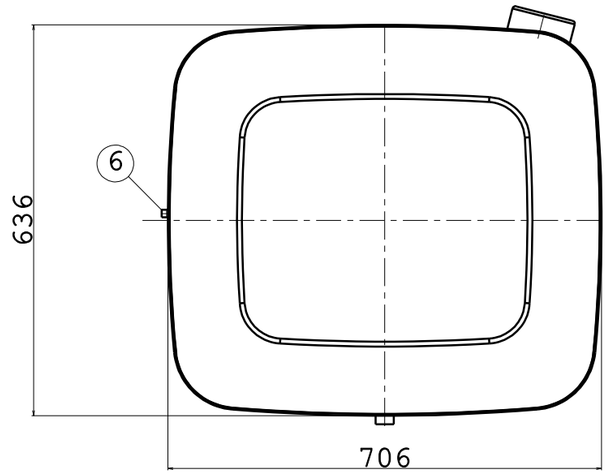

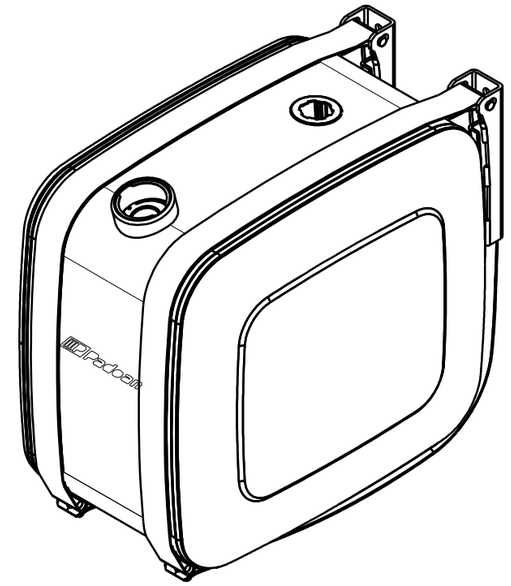

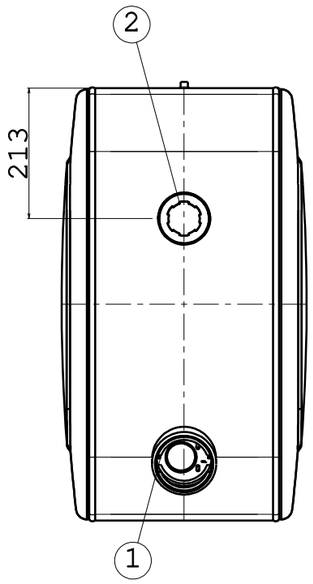

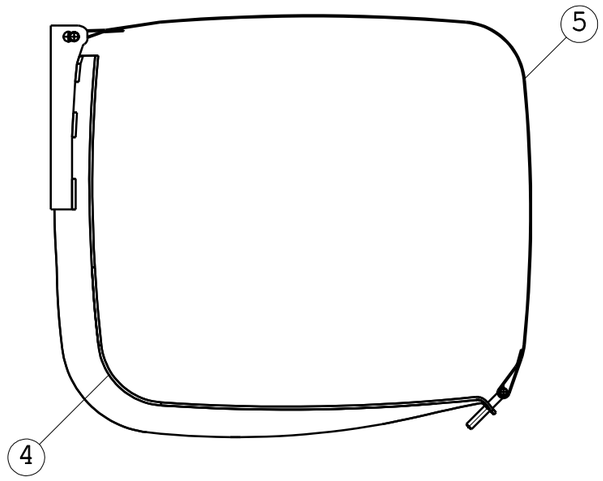

MARK DETAIL

4 SUPPORT CONNECTION DETAIL

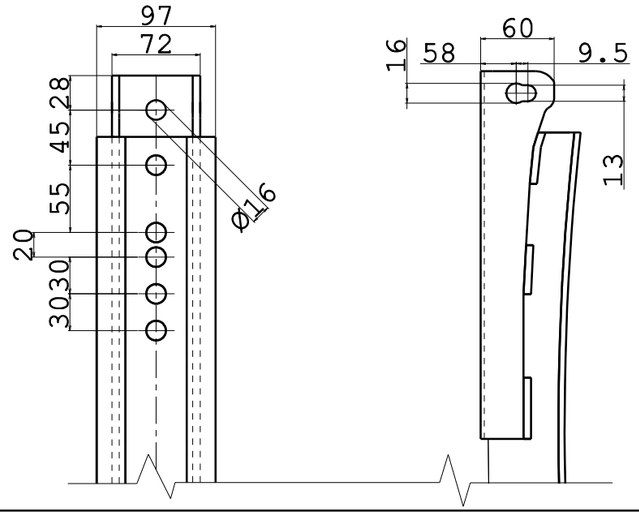

Tank composition

Pos.	Denomination	Q.ty
1	FILLING CAP	1
2	LEVEL INDICATOR VDO TYPE CONNECTION	1
3	DIESEL DRAINAGE	1
4	SUPPORT 63/70	1
5	STRAP	2
6	GROUND CONECTION	1

Padoan
E3 34R III U#A-024018

Tank dimension	0	EMISSION	01/12/2016	MM	MM	EB
	Rev.	Description	Date	Dis.	Ver.	App.

Part name :
Diesel oil tank 150 L Al/Steel/Stainl.Steel fam. 636x706

Full capacity
153 Lt

Support weight
27 Kg

Tank weight
(F,I,T) kg (A) kg

Dimensions
400x636x706 mm

Part code :
NSG(X)0150040C100

Scale:
1:10

Replace the

Replaced by

Material code
(X)=F:Steel DC03A EN 10130
(X)=I:Stainless steel AISI 304 UNI EN 10088
(X)=T:Textured stainless steel. AISI 304 UNI EN 10088
(X)=A:Aluminium EN AW 5754

General tolerances: ISO 2768 V

Drawing format A3

Padoan®

OWNERSHIP OF THIS DRAWING IS RESERVED BY LAW AND MAY NOT REPRODUCED IN WHOLE OR IN PART WITHOUT PERMISSION OF PADOAN S.R.L.

DO NOT MAKE MEASUREMENTS ON DRAWING
DO NOT CHANGE WITHOUT TECHNICAL OFFICE AUTHORIZATION